PULSAR

WWW.PULSAR-NV.COM

PULSAR

RECON X850/X870
DIGITAL NIGHT VISION

I N S T R U C T I O N S

ENGLISH / FRANÇAIS / DEUTSCH / ESPAÑOL / ITALIANO / РУССКИЙ

Class 1 Laser Product

Caution - use of controls or adjustments or performance of procedures other than those specified herein may result in hazardous radiation exposure.

Attention - l'emploi de commandes, réglages ou performances de procédure autres que ceux spécifiés dans ce manuel peut entraîner une exposition à des rayonnements dangereux.

Vorsicht – wenn andere als die hier angegebenen Bedienungs- oder Justiereinrichtungen benutzt oder andere Verfahrensweisen ausgeführt werden, kann dies zu gefährlicher Strahlungsexposition führen.

Atención! La utilización de controles, ajustes o parámetros de procedimiento distintos de los aquí indicados puede provocar una exposición a radiaciones peligrosas.

Attenzione – in caso di utilizzo di dispositivi di comando o di regolazione di natura diversa da quelli riportati in questa sede oppure qualora si seguano procedure diverse vi è il pericolo di provocare un'esposizione alle radiazioni particolarmente pericolosa.

Внимание – использование других не упомянутых здесь элементов управления и настройки или других методов эксплуатации может подвергнуть Вас опасному для здоровья излучению.

v.0114

ENGLISH

SPECIFICATIONS MODEL	78081 RECON X850	78082 RECON X870
Optical characteristics		
Magnification, x	5,5	5,5
Digital zoom, x	2	2
Objective lens	50 mm, F/ 1.0	50 mm, F/ 1,0
Max. detection range with laser IR on, m/yds*	350 / 383	300 / 328
Field of view, degree / m @100m	5,5 / 9,6	5,5 / 9,6
Close-up range, m	5	5
Eyepiece dioptre adjustment, D	±5	±5
Resolution, lines/mm	≥50	≥50
Operational characteristics		
Operating voltage, V	4 ÷ 6 (4xAA)	4 ÷ 6 (4xAA)
External power supply	DC 8,4 ÷ 15V	DC 8,4 -15V
Operation time with one set of batteries (built-in IR off/on), hour	4 / 3-3.5	4 / 3
Output video signal standard	PAL/NTSC**	PAL/NTSC**
Camera resolution, pixel	752x582	752x582
Resolution of microOLED display, pixel	640x480	640x480
Tripod mount, inch	¼	¼
Operating temperature	-20 °C ~ +50 °C / -4 °F ...122 °F	
Degree of protection, IP code (acc. to IEC60529)	IPX4	IPX4
Dimensions, mm:	176x83x62	176x83x62
inch:	7.4x3.3x2.4	7.4x3.3x2.4
Weight (without batteries), kg/oz	0.42 / 14.8	0.42 / 14.8
Characteristics of the built-in laser IR Illuminator		
Wavelength, nm	780	915
Equivalent power, mW	125	125
Safety class for laser equipment according to IEC 60825-1:2007	1	1

* Max. detection range of an object measuring 1.7x0.5 m in natural night conditions (0.05 lux, quarter moon).
** Depending on the region of sale.

1 PACKAGE CONTENTS

- Digital Night Vision **Recon X850/X870**
- Carrying case
- Wrist strap
- Video cable
- Lens cloth
- User manual
- Warranty card

For improvement purposes, design of this product is subject to change.

2 FEATURES

- Built-in laser IR Illuminator (visible or invisible) with power adjustment
- 640x480 OLED display
- 5.5x optical magnificaion
- 2x digital zoom
- Sensitive CCD array
- Signal Processing Program SumLight™
- Long viewing distance
- High Aperture Lens (F/d=1.0)
- Display brightness adjustment
- High Resolution
- Compact & Lightweight
- Video Output
- External power supply
- Resistant to Bright Light Exposure
- Additional Weaver MIL-STD-1913 Rail for Accessories
- Ergonomic eyeshade that protects against lateral ambient light

Your digital night vision monocular **Recon X850/X870** is perfectly suited to a wide range of applications including:

- Outdoor observation
- Video recording and image capture
- Hunting & camping
- Sports and night navigation/observation
- Search and rescue
- Equipment maintenance

3 BATTERY INSTALLATION

- Turn the lever of the battery compartment 90 degrees in **"Open"** position and remove the battery cap.
- Install four AA batteries as indicated (see illustration). Rechargeable batteries are recommended for use.
- Replace the battery cap and turn the lever 90 degrees clockwise
- Low battery icon is located on the data panel. When the battery is low, the LED indicator (3) lights red.

Attention!
Please do not use batteries of different types or batteries with various charge level.

4 EXTERNAL POWER SUPPLY

The device can be powered with an external DC power supply (2.1mm pin) with stabilised voltage ranging from 8.4V to 15V or a 12V vehicle socket. External power supply (AC/DC) is to be connected to port **(12)**.

Note: the central pin of the power supply that you connect to the jack of the device must have marking "+".
The power supply may have marking – –⊂– +

Connection of an external power supply (icon –▮– on the data panel) automatically cuts off power supply from batteries.
External power supply DOES NOT charge the batteries in the device!
Attention! We suggest that you use battery packs EPS3 or EPS5 ensuring from 9 to 20 hours of continuous operation.

5 COMPONENTS AND CONTROL ELEMENTS

1. Objective lens
2. Button **"ON"**
3. LED indicator
4. Display brightness adjustment wheel
5. Eyepiece
6. Built-in laser IR Illuminator
7. Button **"IR"**
8. Video output
9. Button **"S"** (function SumLight™)
10. Button **"Zoom"** (digital zoom)
11. Mount for accessories
12. External power supply jack

6 DATA PANEL ICONS

S	Function "SumLight™" is on
S̸	Function "SumLight™" is off
☼15	Display brightness level
x2	2x digital zoom
IR· IR: IR:	IR Illuminator power level
▭	Low battery indicator
–▮–	Indication for external power supply

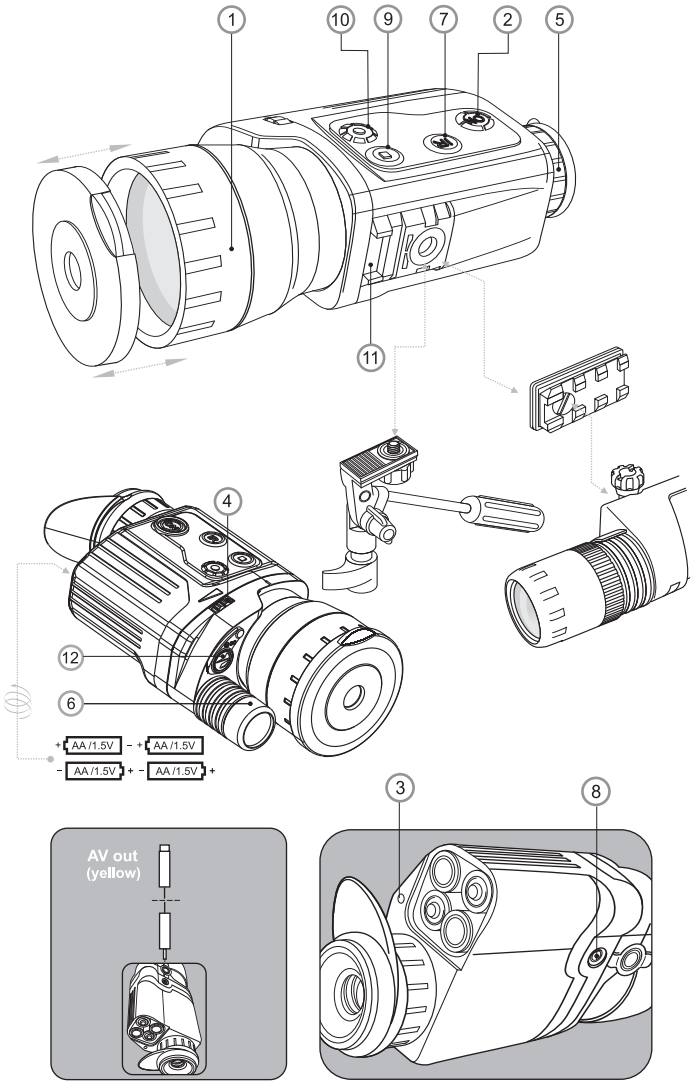

7 APPLICATION

- Remove the lens cap from the objective lens **(1)**.
- We suggest that you do not open the lens cap when conducting observation in the daytime at elevated illumination levels. The light filter, built in the cap, reduces excessive image brightness and makes observation more comfortable.
- Activate the device by pressing the «ON» **(2)** button - the green LED **(3)** will light up. If the battery is low the color of the indicator will turn red.
- To turn off the unit, press the «ON» **(2)** again.
- Locate an object within 20 to 30 meters.
- Adjust image brightness by turning the adjustment wheel **(4)**.
- Brightness level from 0 to 20 is shown next to the icon ☼ in the upper part of the display and then on the data panel.
- **Note:** on activation the device retains the function status before it was turned off.
- Rotate the eyepiece **(5)** and objective lens **(1)** until you see a sharp image.
- When changing the viewing distance, try to see a sharp and high-quality image by rotating the objective lens **(1)** and brightness adjustment wheel **(4)**. Do not rotate the eyepiece **(5)** - the device has already been individually adjusted.
- To activate the 2x digital zoom, press the "Zoom" **(10)** button.
- To increase range of detection and identification in low light conditions or in complete darkness, you may switch on the built-in laser IR Illuminator **(6)** by pressing the **"IR"** button **(7)**. Press the "IR" button successively to change power level (from 1 to 3). Respective icon IR· IR: or IR⁝ will appear on the display and data panel.
- Keep the "IR" button pressed for two seconds to turn off the IR Illuminator.

8 VIDEO OUT JACK

"Video out" jack **(8)** is designed to connect external recording devices and to transmit video signal to monitors, TV sets etc.

- Plug one jackplug of the video cable (supplied) into Recon's video output **(8)** and the second jackplug (**AV OUT**) to an external device.
- Turn on the device - an image will appear on the display of an external device.

9 FUNCTION SUMLIGHT™

The use of Sum Light™ substantially increases sensitivity of the CCD array thus enabling observation in low light without using the IR Illuminator.
The function is activated by default - icon S is shown on the data panel.
To turn off the function, press the **"S" (9)** button. Icon S is shown on the data panel.
Note: on activation the device retains the function status before it was turned off.

Attention! However please note that higher sensitivity causes an increased noise level in the picture, lower frame rate; image slows down, if the riflescope is rapidly moved from one side to the other, the picture may be blurred for a moment. Neither of these effects is a flaw of the unit. After the SumLight™ Signal Processing Program is activated, light dots (pixels) may appear in the field of view which is explained by operation peculiarities of this function. This is not a defect either.

10 ACCESSORIES

The device is equipped with a special mount **(11)** that allows you to affix various accessories, such as IR Flashlight, external power supply (EPS3 or EPS5), video recorder (CVR640) etc.
The unit also has a ¼" standard socket for installation on a tripod.

11 PECULIARITIES OF USE

Turn off the device when not in use and when carrying the unit. The device can be used in daylight as well as nighttime conditions. However, do not point the device towards bright sources of light.

- After using the device in cold temperatures, please, wait up to 2-3 hours before using the device in the warm temperatures. This helps prevent condensation on the lenses.
- Do not leave the device in direct sunlight. Do not submerge in water.
- Do not subject the digital NV device to shock or impact. Do not drop. Sand, dust, and salt can damage the device.
- Do not connect any non-recommended accessories (headphones, for example) to the «Video out» port. This may damage the device and void any guarantee.

- When focusing on the display (you can see the fine black net) a maximum of seven light or dark spots on the whole field of view in the image plane is acceptable.
- Design of the unit does not provide for adjustment of the IR-illuminator.
- **The built-in laser IR Illuminator complies with the Class 1 pursuant to standard IEC60825-1. This guarantees safety of the device. However avoid looking directly at the working laser diode.**

12 STORAGE

Remove the unit's batteries if the device will not be used for a long time. Always store the unit in its case in a dry, well-ventilated area away from heating/air conditioning vents and other heating devices.

13 CLEANING

The housing of the device can be cleaned with a soft cloth. Do not use an abrasive cloth/chemical cleaning solutions.

- Always use cleaning equipment designed for photographic equipment. Dust can be removed from the lens with a soft brush. The lens can be cleaned with any cloth designed for cleaning optical equipment. Do not pour lens cleaner on the lens itself!
- Condensation on the lens may occur when bringing the device in from the cold. This is normal; condensation should disappear within one hour.

Important Note

Do not clean lenses and unit surfaces with any paper, such as newspaper, notebook paper, etc.: this can damage the coating.

14 TROUBLESHOOTING

The table below lists possible problems that you may encounter with your equipment. If the problem is not listed or the corrective actions listed do not correct the issue please notify the manufacturer.

Problem	Test of inspection	Corrective action
Monocular fails to activate.	Visual. Check for defective, missing or improperly installed batteries.	Replace or install batteries.
The unit does not operate on external power supply.	Make sure your power supply provides output voltage. Make sure the central pin of the external power supply is intact.	Charge the power supply (if required). If it's necessary, unbend the pin to ensure electric contact.
Poor image.	Check the objective lens and eyepiece, making sure they are focused according to the instructions listed in section: OPERATING INSTRUCTIONS.	Follow the instructions to adjust the device.
	Check for fog or dirt on the lens. The brightness adjustment wheel **(4)** is in its extreme position.	Adjust brightness with the wheel.
There are several light or black dots (pixels) on the display of the device.	Presence of dots is caused by matrix production technology and is not a defect unless quantity exceeds 7.	No action needed.
Barely visible texture which does not impact detection range and efficiency of observation can be noticed on the display after the built-in laser IR Illuminator is activated.	This is normal for eye safe laser illuminators.	

Peculiarities of CCD array

Sony CCD arrays employed in Pulsar digital night vision devices, feature high quality. However certain white and black defective dots and variable amplitude spots are allowed. These defects can be easily detected when conducting observation both in the day and in the nighttime. Presence of white and black dots, spots and other minor defects of a CCD array (up to 4%) are acceptable in accordance with regulations of the company SONY. Visibility on the screen of a white defect of equal defect level depends on the type of CCD array, camera type, temperature increase after the unit is switches on.